Aerogen®

Aerogen® Pro

System Instruction Manual



www.aerogen.com

Contents

Introduction	2
Indications for Use	2
System Warnings	5
Assembly & Installation	9
Installation For Use With A Ventilator	12
Nebulisation	16
Installation For Use Off-Ventilator	17
Functional Test	19
Cleaning, Disinfection and Sterilisation	20
Troubleshooting	26
Warranty	28
Life Of Product	28
Specifications	29
Performance	30
Symbols	31
Appendix 1	32
Appendix 1: EMC Tables	34

Introduction

The Aerogen® Pro System is a portable medical device for multiple patient use that is intended to aerosolise physician-prescribed medications for inhalation that are approved for use with a general purpose nebuliser. This device can be used by patients on and off mechanical ventilation or other positive pressure breathing assistance.

Aerogen® Pro is suitable for use by neonate, paediatric to adult patients as described in this manual. It incorporates the Aerogen Vibronic® aerosol generator.

Aerogen® Pro is intended for hospital use only. It is designed to operate in-line with standard ventilator circuits and mechanical ventilators. It operates without changing patient ventilator parameters and can be refilled without interrupting ventilation.

The controller operates from the AC/DC adapter and can be operated on its internal rechargeable battery for up to 45 minutes when fully charged. The product operates without compressed gas, making it suitable for portable applications.

Indications for Use

The Aerogen Pro System is a portable medical device for multiple patient use that is intended to aerosolise physician-prescribed solutions for inhalation to patients on and off ventilation or other positive pressure breathing assistance. The Aerogen Pro System is suitable for use in adult, paediatric and neonate patients.

Aerogen Pro System

The Aerogen Pro System includes the following components:

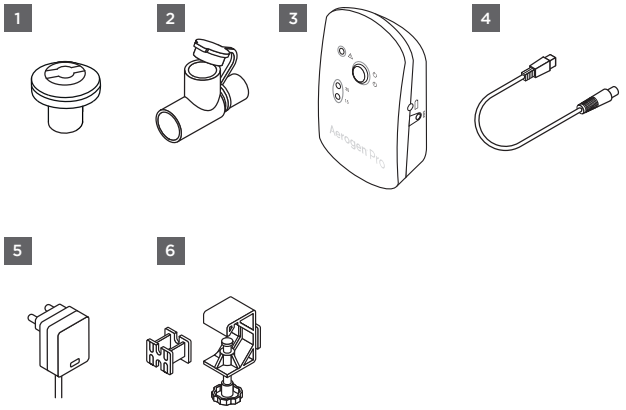

Figure 1. Aerogen Pro System

1. Nebuliser with Filler Cap
2. T-Piece (Adult) with Plug
3. Aerogen Pro Controller
4. Controller Cable
5. AC/DC Adapter
6. Universal Mounting Bracket & Equipment Mount Adapter

Note: Visit www.aerogen.com for full parts list.

1. The nebuliser holds up to 10 mL of liquid medication. The nebuliser is translucent to allow visual monitoring of medication levels and aerosolisation. When the nebuliser is connected into the breathing circuit, the filler cap can be opened or removed from the nebuliser without causing loss of circuit pressure.

   Within the nebuliser is the Aerogen Vibronic® aerosol generator, which consists of a domed aperture plate with precision-formed holes that control the size of the aerosol droplets and a vibrational element that creates micro-pumping action to aerosolise medication. Gravity brings the medication in contact with the aerosol generator; the liquid is then drawn through the aperture plate and converted into an aerosol.

2. The T-piece securely connects the nebuliser into the breathing circuit and can be easily removed for cleaning. The T-piece connections are standard male and female 22 mm ISO conical ports and connect to standard patient breathing circuits.

3, 4, 5.
   The controller can operate from the AC/DC Adapter or the internal rechargeable battery. The controller includes an On/Off power button and sockets for the controller cable and the AC/DC Adapter. The controller also includes indicators for nebulisation cycle selection (15 or 30 minutes), battery charge status and fault conditions.

6. A Universal Mounting Bracket clamps the controller to standard IV poles and medical rail systems.

7. An Equipment Mount Adapter mounts the controller on Standard Equipment Mounts.

Note: Paediatric T-piece, Neonate Adapters, Mask Adapter Kits, Elbow Connectors and Mouthpiece are sold separately.

System Warnings

Read and study all instructions before using the Aerogen Pro System and accessories. Only trained medical personnel should operate the device.

During use observe for correct functioning of the nebuliser by regularly verifying aerosol is visible and no flashing indicator lights.

Do not use a filter or heat-moisture exchanger (HME) between the nebuliser and patient airway.

Do not attach a continuous supply of medication to the nebuliser; the device operates in 15 or 30 minute cycles.

Clean, sterilise, assemble and perform a functional test (page 19) according to the instructions in this manual before first use and between patients.

Do not place the controller in an incubator during use.

To avoid exhaled medication affecting the ventilator, follow ventilator manufacturer's recommendations for use of a bacterial filter in the expiratory limb of a breathing circuit.

To ensure optimum drug administration, consult the drug manufacturer's instructions regarding suitability for nebulisation.

Do not use in the presence of flammable substances or a flammable anaesthetic mixture combined with air or with oxygen or nitrous oxide.

To avoid the risk of fire do not use to aerosolise alcohol-based medications, which can ignite in oxygen-enriched air and under high pressure.

Do not modify this equipment without the authorisation of the manufacturer.

Disconnect the nebuliser from controller before cleaning.

Inspect all parts before use, and do not use if any parts are missing, cracked or damaged. In case of missing parts, malfunction or damage, contact your sales representative.

Do not immerse or autoclave the controller or AC/DC adapter.

Disassemble all parts before autoclaving.

Use only with components specified by Aerogen.

Do not use or store outside of specified environmental conditions.

To avoid mechanical or electrical damage, do not drop the nebuliser or the controller.

Do not use in the presence of devices generating high electromagnetic fields such as magnetic resonance imaging (MRI) equipment.

The Aerogen Pro controller contains a nickel metal hydride (NiMH) rechargeable battery, which should be disposed of in accordance with local governing restrictions at the end of its useful life.

To avoid damage to the nebuliser:

- Prior to use, autoclave according to specified directions and temperature given in the Cleaning, Disinfection and Sterilisation section of this Instruction Manual only. Any deviation from directions given in this Instruction Manual may cause damage to the nebuliser and render it inoperable.
- Do not apply undue pressure to the domed aperture plate in the centre of the nebuliser.
- Do not push out the Aerogen Vibronic® aerosol generator.
- Do not use a syringe with a needle to add medication.
- Do not use abrasive or sharp tools to clean the nebuliser.

Aerogen Pro Controller

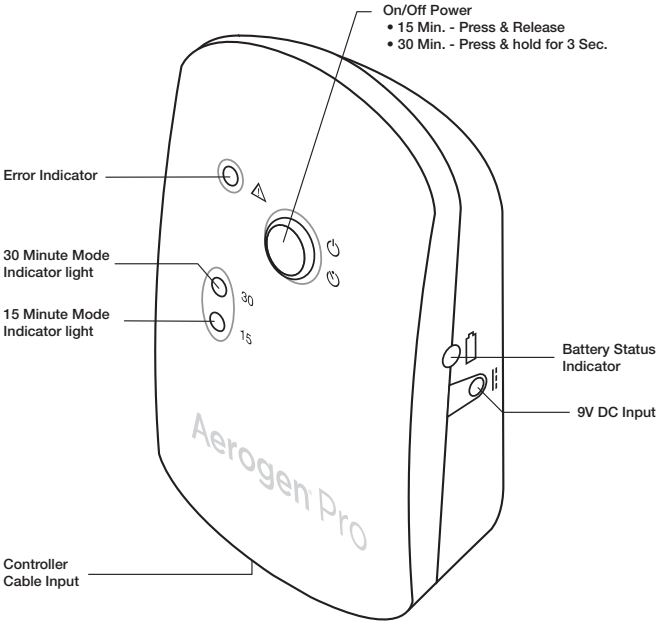

Figure 2. Aerogen Pro Controls & Indicators

Table 1. Aerogen Pro Controls & Indicators

Control / Indicator	Function
15 Min. Indicator	• Green (steadily lit) = 15 Minute nebulisation cycle on • Green (flashing) = Low battery power • Nebuliser automatically powers off after 15 minutes have elapsed
30 Min. Indicator	• Green (steadily lit) = 30 Minute nebulisation cycle on • Green (flashing) = Low battery power • Nebuliser automatically powers off after 30 minutes have elapsed
Error Indicator	• Amber = Faulty electrical connection
On/Off Power Button	• To operate in 15 Minute Mode, press and immediately release the On/Off button • To operate in 30 Minute Mode, press and hold the On/Off button for at least 3 seconds from off • Pressing during nebulisation turns off power to the nebuliser
Battery Status Indicator	• Green = Battery fully charged • Amber = Battery charging • No light = Battery in operation

Recharging the Battery

To recharge the battery, connect the AC/DC Adapter to the controller and connect to AC power source. The battery status indicator is amber while charging and green when fully charged.

If the controller is placed in long-term storage, it is recommended that the battery be recharged every 3 months.

Allow a minimum of four hours for the internal battery to fully recharge.

Assembly & Installation

Aerogen Pro System Set-Up

Clean and sterilise the nebuliser and T-piece(s) as described in the Cleaning, Disinfection and Sterilisation section of this manual.

Note: The nebuliser and T-piece, as packaged, are not sterile.

1. Perform a functional test of Aerogen Pro before use and between patients as described in the Functional Test section of this manual (see page 19).

2. Insert the filler cap into the opening on the nebuliser.

3. Connect the nebuliser to the T-piece by pushing the nebuliser firmly onto the T-piece (Figure 3).

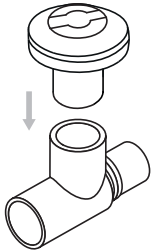

Figure 3. Connecting nebuliser to T-piece

4 Connect the Aerogen Pro controller and the nebuliser together using the controller cable (Figure 4).

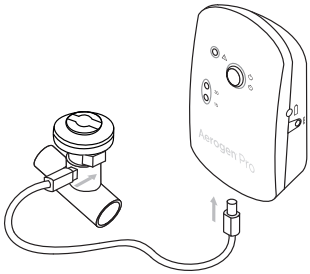

Figure 4. Connecting controller and nebuliser

5 To operate on AC power (the primary mode of operation), connect the Aerogen Pro AC/DC adapter to the Aerogen Pro controller and plug the adapter into an AC power source (Figure 5).

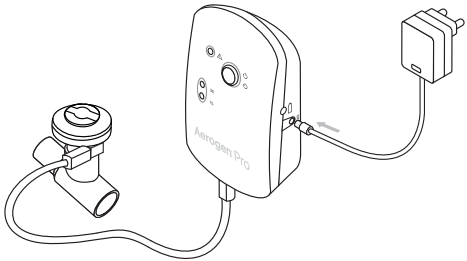

Figure 5. Connecting the AC/DC Adapter

6 The Aerogen Pro can be battery-operated for portable applications. The rechargeable battery can power the System for up to 45 minutes when fully charged. In the case of AC power failure the controller will automatically switch to battery operation.

Note: Allow a minimum of four hours for the internal battery to fully recharge.

Note: To ensure uninterrupted operation of the Aerogen Pro, secure both the AC/DC adapter cable and the controller cable so they cannot become disconnected during treatment. If clips are available on patient circuits, run the cables through the eyes of the clips. If clips are not available, ensure that all cables are routed safely.

Installation for use with a Ventilator

Connection to a Breathing Circuit

1. For **adult breathing circuits,** connect the nebuliser with adult T-piece into the inspiratory limb of the breathing circuit before the patient Y (Figure 6).

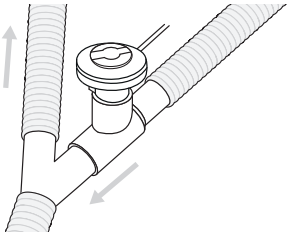

Figure 6. Connecting the Aerogen Pro to an adult breathing circuit

Note: Figure 6 shows adult configuration only

2. For **paediatric breathing circuits**, connect the nebuliser with the paediatric T-piece into the inspiratory limb of the breathing circuit before the patient Y (Figure 7).

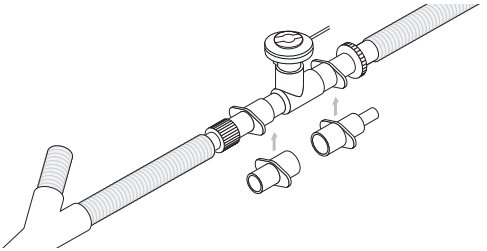

Figure 7. Connecting to a paediatric breathing circuit

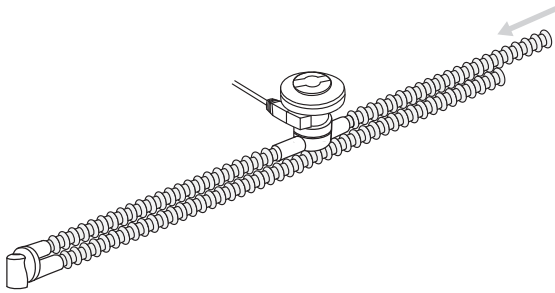

Figure 8. Connecting to a neonatal breathing circuit using neonate T-piece

1. For **neonatal breathing circuits**, connect the nebuliser with the paediatric T-piece and the neonate adapters approximately 30 cm (12 in.) back from the patient Y (Figure 7). Alternatively connect the nebuliser with the Neonate T-piece 30 cm (12 in.) back from the patient Y (Figure 8).

2. Always perform a leak test of the breathing circuit after inserting or removing the nebuliser. Follow ventilator manufacturer instructions for performing a leak test.

3. Use the universal mounting bracket to attach the controller to an IV pole or bed rail in either a vertical or horizontal orientation (Figure 9). Do not over-tighten knob.

   Where a standard equipment mount is available, use the equipment mount adapter to support the controller (Figure 9).

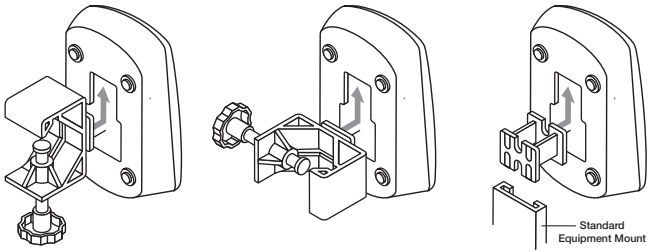

Controller and Vertical Universal Mounting Bracket

Controller and Horizontal Universal Mounting Bracket

Equipment Mount Adapter

Figure 9. Aerogen Pro controller and universal mounting bracket configurations

Warnings

- Always maintain the nebuliser in a vertical orientation (with the filler cap uppermost) while in the patient circuit (Figures 6, 7, & 8). This orientation prevents condensate from blocking the nebuliser and ensures proper nebulisation. Always visually inspect the nebuliser prior to placing in the ventilator circuit to assure that no secretions are blocking the Aerogen Vibronic® aerosol generator.
- When removing the nebuliser from the patient circuit always replace the T-piece plug to maintain circuit pressure.
- Always connect a bacteria filter to the expiratory inlet of the ventilator. Otherwise the function of the expiratory channel may be degraded.
- Do not use a filter or heat-moisture exchanger (HME) between the nebuliser and patient airway.

Adding Medication

- Open the filler cap tab on the nebuliser.
- Use a pre-filled ampoule or syringe to add medication into the filler port of the nebuliser (Figure 10).
- Close the filler cap tab.

Warning: To avoid damage to the nebuliser, do not use a syringe with a needle.

The maximum capacity of the nebuliser is 10 mL. Do not fill the nebuliser beyond the maximum fill indication point (Figure 10). The underside of the filler cap represents maximum fill indication point.

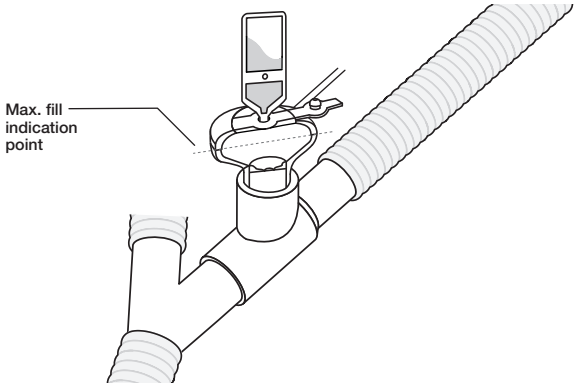

Figure 10. Filling the nebuliser with a pre-filled ampoule

Note: Medication can be added in this manner during nebulisation. This does not interrupt nebulisation or ventilation.

Nebulisation

For doses less than or equal to 3 mL.

1. To start a 15 Minute nebulisation cycle, add the medication and press and release the blue On/Off power button (Figure 2). The green 15 Min. indicator lights to indicate that the 15 Minute nebulisation cycle is in progress.

For doses greater than 3 mL.

2. To start a 30 Minute nebulisation cycle, add the medication and press and hold the blue On/Off power button for at least three seconds. The green 30 Min. indicator lights to indicate that the 30 Minute nebulisation cycle is in progress.
3. To stop the nebuliser at any time, press the On/Off power button. The indicator turns off to indicate that nebulisation has stopped.

Note: When delivering a dose greater than 3 mL, select the 30 Minute cycle.

Installation for use Off-Ventilator

Use with a Face Mask

Mask kits, which include a vented elbow and mask elbow, are available separately (visit www.aerogen.com for full parts list). Contact your sales representative for ordering information.

1. When using a mask, connect the vented elbow, mask elbow and mask to the nebuliser by firmly pushing the parts together.
2. Rotate the vented elbow to suit the position of the patient (Figure 11).

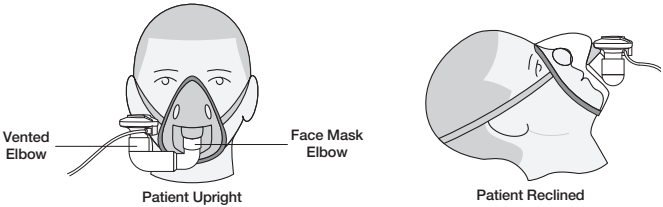

Figure 11. Connecting to a mask

Warning: To ensure correct nebulisation, maintain the nebuliser in a vertical orientation (Figure 11).

Use with a Mouthpiece

The Aerogen Pro works with any standard ISO 22 mm nebuliser mouthpiece inserted into the adult T-piece.

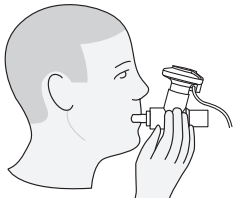

Figure 12. Connecting to a mouthpiece

When using a mouthpiece, connect the nebuliser to the T-piece as shown in Figure 3 and then connect the T-piece to the mouthpiece by pushing the parts firmly together (Figure 12).

Warning: To ensure correct nebulisation, maintain the nebuliser in a vertical orientation (Figure 12).

Functional Test

Perform a functional test of the Aerogen Pro System prior to first use, after each sterilisation before each patient use or at any time to verify proper operation. Follow these steps:

1. Visually inspect each part of the system for cracks or damage and replace if any defects are visible.
2. Pour 1-5 mL of normal saline (0.9%) into the nebuliser.
3. Connect the nebuliser to the controller using the controller cable. Connect the AC/DC Adapter to the controller and plug the AC/DC Adapter into an AC power source.
4. Press and release the blue On/Off power button and verify that the green 15 Min. indicator light illuminates and that aerosol is visible.
5. Disconnect the nebuliser from the controller. Verify that the amber Error Indicator lights. Reconnect the nebuliser to the controller.
6. Press the On/Off power button again to turn the system off. Press and hold the button for at least three seconds. Verify that the green 30 Min. indicator light illuminates and that aerosol is visible.
7. Disconnect the controller from the AC/DC Adapter and verify that nebulisation continues and that the battery status indicator turns off.
8. Turn the system off and verify that the 15 Min. and 30 Min. indicators are off.
9. Discard any remaining liquid before patient use.

Cleaning, Disinfection and Sterilisation

This section describes how to clean, disinfect, sterilise and inspect Aerogen Pro System components. It is important that Aerogen Pro device components are cleaned and sterilised prior to first patient use. The components are:

- Aerogen Pro (including filler cap)
- T-piece (including T-piece plug) for adult and paediatric
- Neonate Adapters
- Aerogen Pro Controller*
- Controller Cable* and AC/DC Adapter*
- Mounting Bracket*

* Components not to be autoclaved.

Warning: Always clean, sterilise and disinfect in accordance with current hospital protocols.

To avoid damage to the nebuliser:

- Autoclave according to specified directions and temperature given in the Cleaning, Disinfection and Sterilisation section of this Instruction Manual only. Any deviation from directions given in this Instruction Manual may cause damage to the nebuliser and render it inoperable.
- Do not apply undue pressure to the domed aperture plate in the centre of the nebuliser.
- Do not push out the Aerogen Vibronic® aerosol generator.

Manual Cleaning

Cleaning nebuliser, T-pieces and Neonate Adapters

1. Ensure there is no medication remaining in the device.
2. Remove nebuliser from T-piece. Remove filler cap from nebuliser.
3. Clean all parts with warm water and mild liquid detergent.
4. Rinse parts with sterile water.
5. Shake excess water from parts and allow parts to fully air dry.

Warning: Do not use abrasive or sharp tools to clean the nebuliser.

Disinfection

Aerogen Pro nebuliser, T-pieces and Neonate Adapters with disinfection agents.

1. Follow steps 1 through 3 in Manual Cleaning section.
2. Completely immerse parts in appropriate disinfecting agent in accordance with current hospital protocols and disinfectant agent manufacturer guidelines.

Note: Aerogen approves the following disinfection solutions for use with its Aerogen Pro nebulisation system regarding material compatibility. With respect to microbiological effectiveness, please ask the manufacturer. Refer to the product labelling for specific instructions regarding activation, safe use and disposal of these solutions.

- Isopropyl (70%)
- CIDEX®
- NU-CIDEX®
- CIDEX® OPA
- Hexanios G+R

Warning: The use of any other means of cleaning, disinfection or sterilisation has not been qualified and is likely to reduce the life of your nebuliser and will invalidate your warranty.

Automated Washing Cycle

The Aerogen Pro nebuliser system has been qualified for the following automated washing cycles.

Automated Cycle One

Detergent: Liquid alkaline cleaner (diluted as per manufacturers instruction).
Water Quality: Mains water.

Method:

1. Load the components in the automated washer.
2. Pre-rinse the components for 3 minutes.
3. Clean the components with liquid alkaline cleaner at 55 °C (131 °F) for 10 minutes.
4. Rinse for 1 minute.
5. Rinse using thermal disinfection cycle at 93 °C (199.4 °F) for 10 minutes.

Automated Cycle Two

Detergent: The following cycle was validated without the use of a detergent.
Water Quality: Mains water.

Method:

1. Load the components in the automated washer.
2. Wash components for 10 minutes at 91 °C (195.8 °F).
3. Drain the machine for 40 seconds.
4. Rinse at 90 °C (194 °F) for 1 minute.
5. Drain the machine for 40 seconds.
6. Rinse at 90 °C (194 °F) for 1 minute.
7. Drain the machine for 40 seconds.
8. Dry at 90 °C (194 °F) for 15 minutes.

Sterilisation of the Aerogen Pro Nebuliser

Sterilisation of Aerogen Pro Nebuliser, T-Pieces & Neonate Adapters

1. Disconnect the nebuliser from the controller, and then remove the nebuliser and adapters from the ventilator circuit, mask or mouthpiece.
2. Disassemble the nebuliser and adapters into individual components.
3. Remove the filler cap from the nebuliser.
4. Clean all parts with warm water and mild liquid detergent in accordance with current hospital protocols. Rinse thoroughly and air dry.
5. Check for cracks or damage and replace if any defects are visible.
6. Place the disassembled components into appropriate sterilisation wrapping.

Warning: Do not reassemble parts prior to autoclaving.

Sterilise Components

Steam sterilisation can be performed using the following three methods:

1. Autoclave wrapped parts using steam sterilisation pre-vacuum cycle, a minimum of 134 °C (270 °F - 275 °F) for 3.5 minutes with drying cycle (134 °C wrapped cycle).
2. Autoclave wrapped parts using steam sterilisation pre-vacuum cycle, a minimum of 121 °C (250 °F) for 20 minutes with drying cycle (121 °C wrapped cycle).
3. Autoclave wrapped parts using steam sterilisation pre-vacuum cycle, a minimum of 134 °C (270 °F - 275 °F) for 20 minutes with drying cycle (sometimes referred to as a “Prion cycle”).

Note: Sterilisation using the long autoclave cycle (No. 3 above) may cause some areas of the nebuliser to become discolored. This is not indicative of the performance of the nebuliser.

To sterilise with hydrogen peroxide gas plasma, place wrapped parts in a STERRAD® System and use the long cycle.

Warning: Users should refer to the product labelling for the STERRAD® 100S Sterilisation System for specific instructions regarding its correct operation.

Prior to next use:

1. Check for cracks or damage and replace if any defects are visible.
2. Perform a functional test as described in this manual.

Cleaning the Aerogen Pro Controller

Cleaning of controller, controller cable & AC/DC adapter

1. Wipe clean with an alcohol based disinfectant wipe or a quaternary ammonium compound based disinfectant wipe.
2. Check for exposed wiring, damaged connectors, or other defects and replace if any are visible.
3. Visually inspect for damage and replace the controller if any damage is observed.

Warnings

- Do not autoclave.
- Do not use abrasive or sharp tools.
- Do not spray liquid directly onto the controller.
- Do not immerse controller in liquid.

Note: The Aerogen Pro nebuliser contains active electronic components. Aerogen has validated the methods of cleaning, disinfection and sterilisation above. The use of any other means of cleaning, disinfection or sterilisation has not been validated and is likely to reduce the life of your nebuliser and will invalidate your warranty.

Cleaning of mounting brackets

Wipe clean with an alcohol based disinfectant wipe or a quaternary ammonium compound based disinfectant wipe. Do not use abrasive or sharp tools.

Troubleshooting

If these suggestions do not correct the problem, discontinue use of any device and contact your local Aerogen sales representative.

Table 2. Aerogen Pro Troubleshooting

If this happens:	It could mean:	Try this:
The 15 Min. or 30 Min. indicator flashes during nebulisation.	Battery power is low.	Recharge battery (see Recharging the Battery).
Battery will not recharge. Constant green light showing on the battery status indicator and flashing green light on either the 15 Min. or 30 Min. indicator light, when the controller is connected to the AC/DC Adapter.	It may be time to replace the battery.	Contact your local Aerogen sales representative.
Battery will not retain initial charge.	Rechargeable battery may need to be replaced.	Contact your local Aerogen sales representative.
The 15 Min. or 30 Min. light illuminates, but aerosol is not visible.	No medication in nebuliser.	Refill medication through filler cap in the nebuliser (see page 15).
	Nebuliser has not been cleaned properly.	Clean nebuliser (see page 20)
	It may be time to replace the nebuliser.	See Warranty and Life of Product. Refer to Aerogen Pro parts list by visiting www.aerogen.com.
15 Min. or 30 Min. indicator does not light when On/Off power button is pressed.	There is no power to the system.	Verify that AC/DC adapter is securely attached to controller.
	Rechargeable battery is depleted.	Recharge battery (see Recharging the Battery).
The error indicator light illuminates.	The controller cable is incorrectly connected to the nebuliser, or electronics are malfunctioning.	Verify that controller cable is correctly connected to both the nebuliser and the controller.

Table 2. Aerogen Pro Troubleshooting (Continued)

If this happens:	It could mean:	Try this:
Longer than expected treatment time. e.g. 3 mL of Normal Saline (0.9%) should take no longer than 15 minutes to nebulise.	Rechargeable battery is depleted.	Recharge battery (see Recharging the Battery).
	Nebuliser has not been properly cleaned.	Clean nebuliser (see page 20).
	It may be time to replace the nebuliser.	See Warranty and Life of Product. Refer to Aerogen Pro parts list by visiting www.aerogen.com.
Medication is left in the nebuliser after nebulisation cycle.	Nebuliser was not turned on or connected to power.	Ensure that nebuliser is connected to power and turned on.
	Rechargeable battery is depleted.	Recharge battery (see Recharging the Battery).
	Nebuliser has not been properly cleaned.	Clean nebuliser (see page 20).
	A 15 Minute cycle was selected and a volume greater than 3 mL was added to the nebuliser.	Run an additional 15 Minute cycle. When delivering a dose greater than 3 mL select the 30 Minute cycle.
	It may be time to replace the nebuliser.	See Warranty and Life of Product. Refer to Aerogen Pro parts list by visiting www.aerogen.com.

Note: The rechargeable battery in the Aerogen Pro controller should only be replaced by Aerogen authorised personnel: contact your Aerogen sales representative.

Warranty

The Aerogen Pro nebuliser is warranted for one year from date of purchase against defects in manufacturing. The Aerogen Pro controller and AC/DC Adapter are warranted for a period of two years from the date of purchase against defects in manufacturing. All warranties are based on typical usage.

Life of Product

As with all active electronic components, the Aerogen Pro nebuliser has a defined life. In the case of Aerogen Pro controller, the life of the controller unit has been validated for use for 1460 doses. This is based on a typical product usage profile over a two year period, including four treatments per day, 50% of the time.

The life of the Aerogen Pro nebuliser and components have been validated for use for 730 doses and 26 autoclave treatments based on a typical one year usage profile of four treatments per day and one sterilisation per week, where the device is assumed to be in service for 50% of the time. The user should note that any use in excess of this may result in reduced life of the product.

Specifications

Table 3. Physical Specifications of the Aerogen Pro System

Nebuliser Dimensions	45 mm H x 50 mm W x 50 mm D 1.8" H x 2.0" W x 2.0" D
Aerogen Pro Controller Dimensions	33mm H x 75mm W x 131mm D 1.3" H x 2.9" W x 5.2"D
Controller Cable Length	1.8 m (5.9 ft.)
AC/DC Adapter Cable Length	2.1 m (6.7 ft.)
Nebuliser Weight	25 g (0.9 oz) nebuliser and filler cap
Aerogen Pro Controller Weight	230 g (8.1 oz.), including battery and cable
Nebuliser Capacity	Maximum 10 mL

Table 4. Environmental Specifications of the Aerogen Pro System

Operating	Maintains specified performance at circuit pressures up to 90cm H2O and temperatures from 5 °C (41°F) up to 45 °C (113°F).	
	Atmospheric Pressure	450 to 1100 hPa
	Humidity	15% to 95% relative humidity
	Noise Level	< 35 dB measured at 0.3 m distance
Storage & Transport	**Transient Temperature Range**	-20 to +60°C (-4 to +140°F)
	Atmospheric Pressure	450 to 1100 hPa
	Humidity	15 to 95% relative humidity

Table 5. Power Specifications of the Aerogen Pro System

Power Source	Can operate from AC/DC Adapter (input 100 to 240 VAC 50 – 60 Hz, output 9 V) or internal rechargeable battery (4.8 V nominal output). **Note:** The Aerogen Pro controller is approved for use with Aerogen AC/DC adapter AG-AP1040-XX* (Manufacturer Reference: FRIWO FW8000M/09 / FW7660M/09)
Power Consumption	≤ 6.5 Watts (charging), ≤ 2.0 Watts (nebulising).
Patient Isolation	Controller circuitry provides 4 kilovolt (kV) patient isolation and complies with IEC/EN 60601-1.

***** Consult your local representative for the order number extension specific to your country and for pricing information.

Performance

Table 6. Performance Specifications of the Aerogen Pro

Flow Rate	> 0.2 mL/min (Average ~ 0.4 mL/min)
Particle Size	**As measured with the Andersen Cascade Impactor:** Specification Range: 1-5 µm Average Tested: 3.1 µm **As measured with the Marple 298 Cascade Impactor:** Specification Range: 1.5-6.2 µm Average Tested: 3.9 µm **As per EN 13544-1, with a starting dose of 2 mL:** Aerosol Output rate: 0.24 mL/min Aerosol Output: 1.08 mL emitted of 2.0 mL dose Residual Volume: <0.1 mL for 3 mL dose
Performance may vary depending upon the type of drug and nebuliser used. For additional information contact Aerogen or drug supplier.	
The temperature of the medication will not rise more than 10°C (18°F) above ambient during normal use.	

Representative particle size distribution for Albuterol as per EN 13544-1 is shown below.

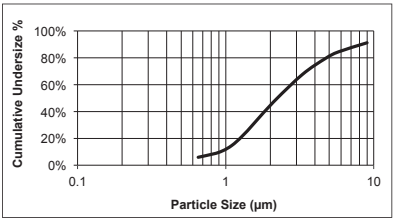

Symbols

Table 7. Aerogen Pro System Symbols

Symbol	Meaning	Symbol	Meaning
YYXXXXX	Serial number designation, where YY is the year of manufacture and XXXXX is the serial number		Transient storage temperature limitations -20 °C to +60 °C
	Caution Attention: Consult accompanying documents	**QTY**	Quantity (Number of units contained in package)
	Degree of protection against dripping water		Certified by TUV with respect to electric shock, fire and mechanical hazards
	Class II equipment per IEC/EN 60601-1		Controller Input - DC voltage
	Type BF equipment per IEC/EN 60601-1		Controller Output – AC voltage
	On/Off power button (standby)		Output
	Timer selection (to select the 15 Minute or 30 Minute nebulisation cycles)		Battery status indicator
Rx Only	Federal (US) Law restricts this device to sale by or on the order of a physician		Refer to instruction manual/booklet

Appendix 1

Electromagnetic Susceptibility

This device meets the requirements of the Electromagnetic Compatibility (EMC), pursuant to the Collateral Standard, IEC/EN 60601-1-2, which addresses EMC in North America, Europe and other global communities. This includes immunity to radio frequency electric fields and electrostatic discharge, in addition to the other applicable requirements of the standard. Compliance with EMC standards does not mean a device has total immunity; certain devices (cellular phones, pagers, etc.) can interrupt operation if they are used near medical equipment. Follow institutional protocol regarding the use and location of devices that could interfere with medical equipment operation.

Note: This device is classified as Class II Type BF medical electrical equipment and the device complies with specified safety levels for electrical isolation and leakage current. The Aerogen Pro AC/DC Adapter (AG-AP1040-XX*) has no connection to earth ground because the necessary level of protection is achieved through the use of double insulation.

Warnings

- Only use the Aerogen Pro nebuliser with components specified in the Instruction Manual. Use of the Aerogen Pro nebuliser with components other than those specified in the Instruction Manual may result in increased emissions or decreased immunity of the Aerogen Pro nebuliser system.
- Do not use the Aerogen Pro adjacent to or stacked with other equipment. If adjacent or stacked use is necessary, the device should be observed to verify normal operation in this configuration.
- The Aerogen Pro needs special precautions regarding electromagnetic compatibility (“EMC”) and must be installed and put into service according to the EMC information provided in the Instruction Manual.

- Portable and mobile radio frequency (“RF”) communication devices can disrupt medical electrical equipment.

***** Consult your local representative for the order number extension specific to your country and for pricing information.

Appendix 1: EMC Tables

The following tables are provided in accordance with IEC/ EN 60601-1-2:

Table 8. Guidance and manufacturer's declaration – electromagnetic emissions

The Aerogen Pro nebuliser system is intended for use in the electromagnetic environment specified below. The customer or the user of the Aerogen Pro nebuliser system should assure that it is used in such an environment.		
Emissions test	**Compliance**	**Electromagnetic Environment - Guidance**
RF Emissions Conducted and Radiated CISPR 11 EN 55011: 2009 + A1: 2010	Group 1	The Aerogen Pro nebuliser system uses RF energy only for its internal function. Therefore, its RF emissions are very low and are not likely to cause any interference in nearby electronic equipment.
RF Emissions Conducted and Radiated CISPR 11 EN 55011: 2009 + A1: 2010	Class B	The Aerogen Pro nebuliser system is suitable for use in all establishments, including domestic establishments and those directly connected to the public low-voltage power supply network that supplies buildings used for domestic purposes.
Harmonic emissions IEC 61000-3-2 EN 61000-3-2: 2014	Not Applicable	
Voltage fluctuations / flicker emissions IEC 61000-3-3 EN 61000-3-3: 2013	Not Applicable	

Table 9. Recommended separation distances between portable and mobile RF communication equipment and the Aerogen Pro nebuliser system that is not life supporting

This Aerogen Pro nebuliser system is intended for use in an electromagnetic environment specified in Table 8. The customer or the user of the Aerogen Pro nebuliser system can help prevent electromagnetic interference by maintaining a minimum distance between portable and mobile RF communications equipment (transmitters) and the Aerogen Pro nebuliser system as recommended below, according to the maximum output power of the communications equipment.

Rated maximum output power of transmitter W	Separation distance according to frequency of transmitter m		
	150 kHz to 80 MHz $d = [1.17]\sqrt{P}$	80 MHz to 800 MHz $d = [1.17]\sqrt{P}$	800 MHz to 2.5 GHz $d = [2.33]\sqrt{P}$
0.01	0.12	0.12	0.23
0.1	0.37	0.37	0.75
1	1.17	1.17	2.33
10	3.70	3.70	7.36
100	11.70	11.70	23.30

For transmitters rated at a maximum output power not listed above, the recommended separation distance *d* in metres (m) can be estimated using the equation applicable to the frequency of the transmitter, where *P* is the maximum output power rating of the transmitter in watts (w) according to the transmitter manufacturer.

Note 1: At 80 MHz and 800 MHz, the separation distance for the higher frequency range applies.

Note 2: These guidelines may not apply in all situations. Electromagnetic propagation is affected by absorption and reflection from structures, objects and people.

Table 10. Guidance and manufacturer's declaration – electromagnetic immunity for the Aerogen Pro nebuliser system that is not life supporting

This Aerogen Pro nebuliser system is intended for use in the electromagnetic environment specified below. The customer or the user of the Aerogen Pro nebuliser system should assure that it is used in such an environment.			
Immunity Test	**IEC/EN 60601 Test Level**	**Compliance Level**	**Electromagnetic Environment - Guidance**
Electrostatic discharge (ESD) IEC 61000-4-2 EN 61000-4-2: 2009	±8 kV contact ±15 kV air	±2, 4, 6 & 8 kV contact ±2, 4, 6, 8 & 15 kV air	Floors should be wood, concrete or ceramic tile. If floors are covered with synthetic material, the relative humidity should be at least 30%.
Electrical fast Transient/burst IEC 61000-4-4 EN 61000-4-4: 2012	±2 kV for power supply lines ±1 kV for input/ output lines	±2 kV for power supply lines ±1 kV for input/ output lines	Mains power quality should be that of a typical commercial or hospital environment.
Surge IEC 61000-4-5 EN 61000-4-5: 2006	±1 kV differential mode ±2 kV common mode	±1 kV differential mode ±2 kV common mode	Mains power quality should be that of a typical commercial or hospital environment.
Voltage dips, short interruptions and voltage variations on power supply input lines IEC 61000-4-11 EN 61000-4-11: 2004	<5 % Ut (>95 % dip in Ut) for 0.5 cycle @ 0°, 45°, 90°, 135°, 180°, 225°, 270°, 315° 70 % Ut (30 % dip in Ut) for 25 cycles <5 % Ut (>95 % dip in Ut) for 5 sec	<5 % Ut (>95 % dip in Ut) for 0.5 cycle @ 0°, 45°, 90°, 135°, 180°, 225°, 270°, 315° 70 % Ut (30 % dip in Ut) for 25 cycles <5 % Ut (>95 % dip in Ut) for 5 sec	Mains power quality should be that of a typical commercial or hospital environment. If the user of the Aerogen Pro nebuliser system requires continued operation during power mains operation, it is recommended that the Aerogen Pro nebuliser system be powered from an uninterruptible power supply or battery.

Table 10. Guidance and manufacturer's declaration – electromagnetic immunity for the Aerogen Pro nebuliser system that is not life supporting (Continued)

Power frequency (50/60 Hz) Magnetic field **IEC 61000-4-8 EN 61000-4-8: 2010**	**30 A/m**	**30 A/m**	**Power frequency magnetic fields should be at levels characteristic of a typical location in a typical commercial or hospital environment.**
Note: Ut is the A.C. mains voltage prior to application of the test level.			

Table 11. Guidance and manufacturer's declaration - electromagnetic immunity for the Aerogen Pro nebuliser system that is not life supporting

This Aerogen Pro nebuliser system is intended for use in the electromagnetic environment specified below. The customer or the user of the Aerogen Pro nebuliser system should assure that it is used in such an environment.			
Immunity Test	**IEC 60601 Test Level**	**Compliance Level**	**Electromagnetic Environment - Guidance**
Conducted RF IEC 61000-4-6 EN 61000-4-6: 2014	**3 Vrms outside industrial, scientific and medical (ISM) and amateur radio bands. 6 Vrms in ISM and amateur radio bands 150 kHz to 80 MHz**	**10 Vrms 150 kHz to 80 MHz**	Portable and mobile RF communications equipment should be used no closer to any part of the Aerogen Pro nebuliser system, including cables, than the recommended separation distance calculated from the equation applicable to the frequency of the transmitter. **Recommended Separation Distance** $d = [1.17] \sqrt{P}$

Table 11. Guidance and manufacturer's declaration - electromagnetic immunity for the Aerogen Pro nebuliser system that is not life supporting (Continued)

Immunity Test	IEC 60601 Test Level	Compliance Level	Electromagnetic Environment - Guidance
Radiated RF IEC 61000-4-3 EN 61000-4-3: 2010	10 V/m 80 MHz to 2.7 GHz 27 V/m, 18 Hz PM 385 MHz 28 V/m, 50 %18 Hz PM 450 MHz 9 V/m, 217 Hz PM 710 MHz 9 V/m, 217 Hz PM 745 MHz 9 V/m, 217 Hz PM 780 MHz 28V/m, 18 Hz PM 810 MHz 28 V/m, 18 Hz PM 870 MHz 28 V/m, 18 Hz PM 930 MHz 28V/m, 217 Hz PM 1720 MHz 28 V/m, 217 Hz PM 1845 MHz 28 V/m, 217 Hz PM 1970 MHz 27 V/m, 217 Hz PM 2450 MHz 9V/m, 217 Hz PM 5240 MHz	10 V/m 80 MHz to 2.7 GHz 27 V/m, 18 Hz PM 385 MHz 28 V/m, 50 %18 Hz PM 450 MHz 9 V/m, 217 Hz PM 710 MHz 9 V/m, 217 Hz PM 745 MHz 9 V/m, 217 Hz PM 780 MHz 28V/m, 18 Hz PM 810 MHz 28 V/m, 18 Hz PM 870 MHz 28 V/m, 18 Hz PM 930 MHz 28V/m, 217 Hz PM 1720 MHz 28 V/m, 217 Hz PM 1845 MHz	d = [1.17] √P... 80MHz to 800MHz d = [2.33] √P... 800MHz to 2.5GHz where P is the maximum output power rating of the transmitter in Watts (W) according to the transmitter manufacturer and d is the recommended separation distance in metres (m). Field strengths from fixed RF transmitters, as determined by an electromagnetic site survey,[a] should be less than the compliance level in each frequency range.[b] Interference may occur in the vicinity of equipment marked with the following symbol: 

Table 11. Guidance and manufacturer's declaration - electromagnetic immunity for the Aerogen Pro nebuliser system that is not life supporting (Continued)

	9 V/m, 217 Hz PM 5500 MHz 9 V/m, 217 Hz PM 5785 MHz	28 V/m, 217 Hz PM 1970 MHz 27 V/m, 217 Hz PM 2450 MHz 9V/m, 217 Hz PM 5240 MHz 9 V/m, 217 Hz PM 5500 MHz 9 V/m, 217 Hz PM 5785 MHz	

Note 1: At 80 MHz and 800 MHz, the separation distance for the higher frequency range applies.

Note 2: These guidelines may not apply in all situations. Electromagnetic propagation is affected by absorption and reflection from structures, objects and people.

a) Field strengths from fixed transmitters, such as base stations for radio (cellular/cordless) telephones and land mobile radios, amateur radio, AM and FM radio broadcast and TV broadcast cannot be predicted theoretically with accuracy. To assess the electromagnetic environment due to fixed RF transmitters, an electromagnetic site survey should be considered. If the measured field strength in the location in which the Aerogen Pro nebuliser system is used exceeds the applicable RF compliance level above, the Aerogen Pro nebuliser system should be observed to verify normal operation. If abnormal performance is observed, additional measures may be necessary, such as re-orientating or relocating the Aerogen Pro nebuliser system.

b) Over the frequency range 150 kHz to 80 MHz, field strengths should be less than [V1]V/m.

Aerogen®

Pioneering Aerosol Drug Delivery

INTL. +353 91 540 400

e. info@aerogen.com
w. www.aerogen.com
twitter.com/aerogen

© 2018 Aerogen Ltd.
Part No. AG-AP1080-UK
P/N 30-012 Rev R

CE
0050

Manufacturer

Aerogen Ltd.

Galway Business Park,
Dangan, Galway,
Ireland.